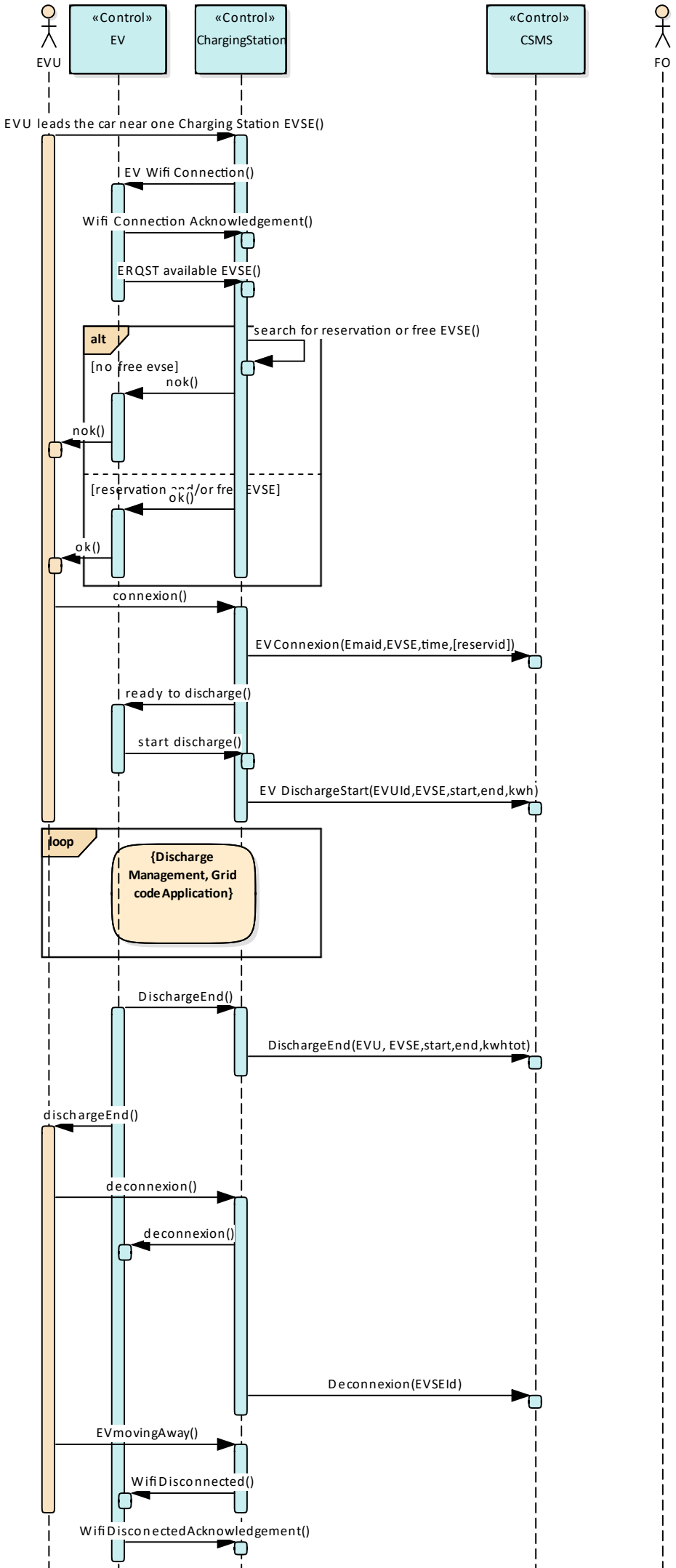
EVU
«Control»
EV
«Control»
ChargingStation
«Control»
CSMS
FO
EVU leads the car near one Charging Station EVSE()
EV Wifi Connection()
Wifi Connection Acknowledgement()
ERQST available EVSE()
alt
search for reservation or free EVSE()
[no free evse]
nok()
nok()
[reservation and/or free EVSE]
ok()
ok()
connexion()
EVConnexion(Emaid,EVSE,time,[reservid])
ready to discharge()
start discharge()
EV DischargeStart(EVUId,EVSE,start,end,kwh)
loop
{Discharge Management, Grid code Application}
DischargeEnd()
DischargeEnd(EVU, EVSE,start,end,kwhtot)
dischargeEnd()
deconnexion()
deconnexion()
Deconnexion(EVSEId)
EVmovingAway()
WifiDisconnected()
WifiDisconectedAcknowledgement()