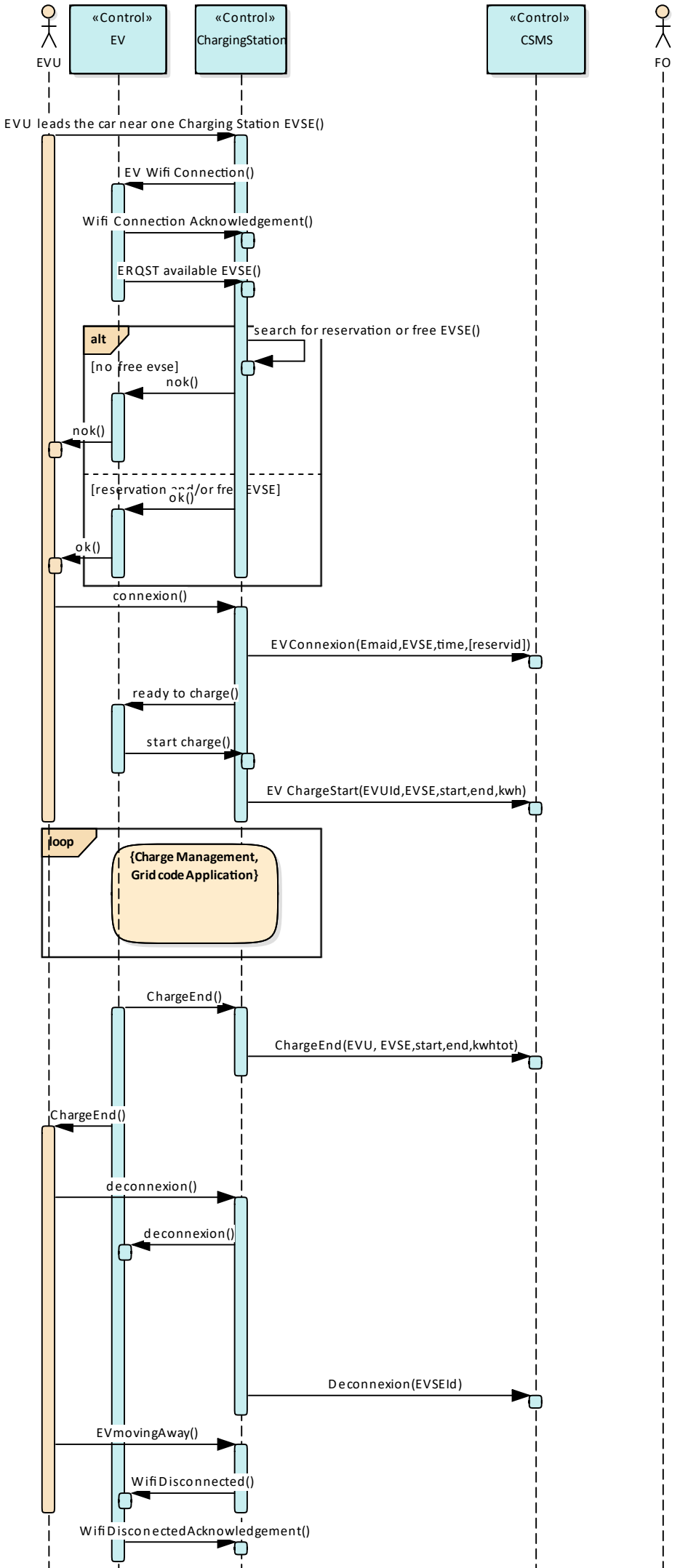
EVU
«Control»
EV
«Control»
ChargingStation
«Control»
CSMS
FO
EVU leads the car near one Charging Station EVSE()
EV Wifi Connection()
Wifi Connection Acknowledgement()
ERQST available EVSE()
search for reservation or free EVSE()
alt
[no free evse]
nok()
nok()
[reservation and/or free EVSE]
ok()
ok()
connexion()
EVConnexion(Emaid,EVSE,time,[reservid])
ready to charge()
start charge()
EV ChargeStart(EVUId,EVSE,start,end,kwh)
loop
{Charge Management,
Grid code Application}
ChargeEnd()
ChargeEnd(EVU, EVSE,start,end,kwhtot)
ChargeEnd()
deconnexion()
deconnexion()
Deconnexion(EVSEId)
EVmovingAway()
WifiDisconnected()
WifiDisconectedAcknowledgement()